TED (15) – 2005 A

(REVISION — 2015)

Reg. No. .....

Signature .....

SECOND SEMESTER DIPLOMA EXAMINATION IN ENGINEERING/TECHNOLOGY — APRIL, 2017

ENGINEERING GRAPHICS

(Common to all branches except DCP and CABM)

[*Time* : 3 hours

(Maximum marks : 100)

[*Note* :— 1. Missing data if any suitably assumed.

2. Sketches to be accompanied.]

PART — A

(Maximum marks : 10)

Marks

I Answer the following questions in one or two sentences. Each question carries 2 marks.

1. Name the preferred sizes of drawing sheet and its designation.
2. Define plain scale.
3. Define cycloid.
4. State cabinet oblique projection.
5. Name any four types of facilities for entering commands on AUTO CAD.

(5×2 = 10)

PART — B

(Maximum marks : 30)

II Answer *any five* questions from the following. Each question carries 10 marks.

1. Read the dimensioned drawing shown in figure 1. Re-draw the figure and dimension it as per BIS.
2. A circle of diameter 70mm is given. Inscribe a regular pentagon with in the circle.
3. Construct a diagonal scale of 1 : 5000 to show single meter and long enough to measure 300 meters. Mark on the scale a distance of 285.5 meter.
4. Draw an Involute of a circle 60mm in diameter.

Marks

5. Draw the projections of the following points on a common reference line.
   (a) Point A is 15mm above HP and 25mm in front of VP.
   (b) Point B is 20mm below HP and 35mm behind VP.
   (c) Point C is in HP and 30mm behind VP.
   (d) Point D is 22mm below HP and 38mm in front of VP.
   (e) Point E is lying both HP and VP.

6. The length of top view of a line parallel to VP and inclined at 45° to HP is 50mm. One end of the line is 12mm above HP and 25mm in front of VP. Draw the projections of the line and determine its true length.

7. Draw the development of the funnel as shown in figure 2. (5×10 = 50)

PART — C

(Maximum marks : 40)

(Answer *any two* question from the following. Each question carries 20 marks.)

III A stepped block is shown in figure 3. Draw the following orthographic views.
   (a) Front view looking in the direction of F.
   (b) Top view in direction of T.
   (c) Side view in the direction of R.

IV The pictorial view of a shaft support shown in figure 4. Draw full sectional front view in the direction of F and top view.

V The orthographic views of a guide block are shown in figure 5. Draw its cavalier oblique projection keeping the receding axis slopping upward to the right.

(2×20 = 40)

TED (15) – 2005 A

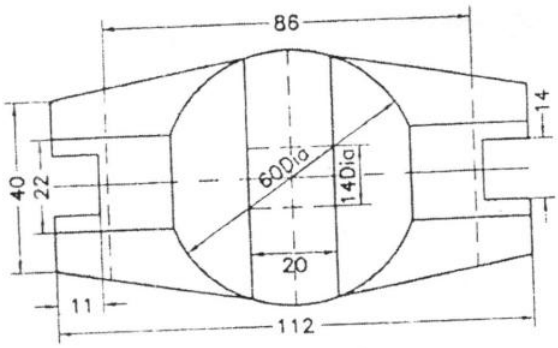

FIG - 1

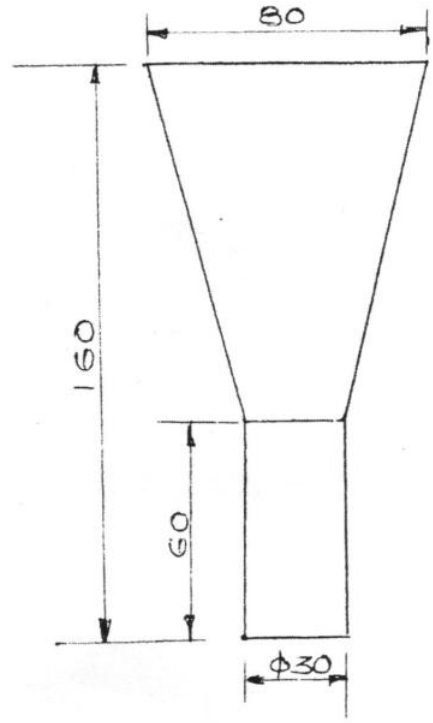

FIG - 2

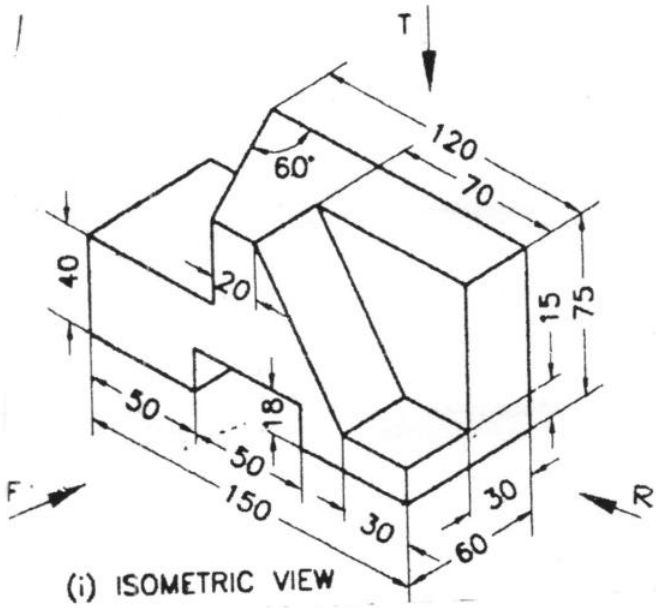

(i) ISOMETRIC VIEW

FIG - 3

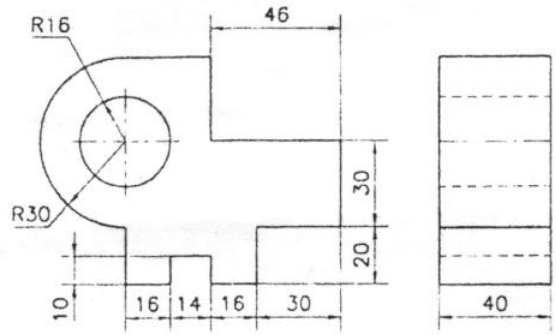

(i) ORTHOGRAPHIC VIEWS

FIG - 5

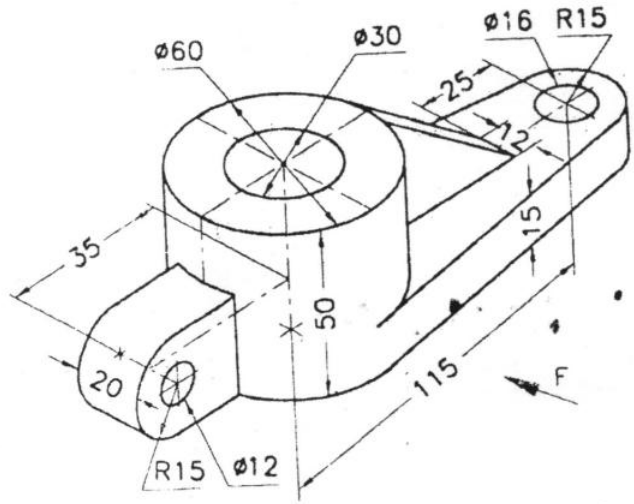

FIG - 4